DESIGN DATA :

STANDARD CODE	:	IS 16018 : 2012
TYPE OF EXTINGUISHER	:	TROLLEY MOUNTED TYPE
EXTINGUISHING MEDIUM	:	MONO AMMONIUM PHOSPHATE 50% POWDER- IS:14609
CLASS OF FIRE	:	A,B & C
CAPACITY	:	25 KG.(BY WEIGHT OF EXTINGUISHING CHARGE)
DISHCHARGE TIME	:	MINIMUM 30 SEC. (Actual : 32 sec approx)
RANGE OF THROW OF JET	:	NOT LESS THAN 6 METERS.
	:	(Actual : 6.5 meters approx)
PERCENTAGE DISCHARGE		NOT LESS THAN 85%
HYDRAULIC PRESSURE TEST	:	35 kgf/cm^2 FOR 30 SEC.
BURST PRESSURE	:	MIN. 70 kgf/cm^2 for 60 SEC.
SERVICE PRESSURE/EXPANSION SPACE	:	NOT TO EXCEED 15 kgf/cm^2
DIA. OF BODY	:	300±10mm.O/D.
TOTAL HEIGHT	:	980mm (APPROX)
FINISH	:	PO RED AS PER IS:5 (SHADE - 538)
MARKING	:	AS PER IS:16018-2012

Sr.No.	Item Description		Materials of Constructions
20.	PRESSURE GAUGE	:	0 TO 28 kgf/cm^2
19.	TROLLEY WHEEL	:	SOLID RUBBER
18.	CARRYING HANDLE	:	M.S.PIPE
17.	DRAIN NECK RING	:	M.S.
16.	DRAIN PLUG WASHER	:	RUBBER
15.	DRAIN PLUG	:	BRASS
14.	DISCHARGE NOZZLE	:	ALUMINIUM ALLOY IS:617
13.	DISCHARGE HOSE	:	PVC BRAIDED (BURST PRESSURE ≥50kgf/cm^2)
12.	CO2 CONNECTION ADAPTOR	:	M.S.
11.	CO2 CONNECTION HOSE	:	WIRE BRAIDED
10.	CO2 SYPHONE TUBE	:	ALUMINIUM
09.	DISCHARGE VALVE	:	CONFIRM TO IS : 3224
08.	CO2 GAS CYLINDER (1 KG)	:	AS PER IS:7285
07.	SIPHONE TUBE (INLET)	:	M.S. PIPE TO IS:3601
06.	DISCHARGE ELBOW	:	M.S. FORGED
05.	SIPHONE TUBE (OUTLET)	:	M.S. PIPE TO IS:3601
04.	WASHER	:	RUBBER
03.	CAP	:	BRASS TO IS : 319
02.	NECK RING	:	M.S.PIPE OF IS:1239 (Part - 1)
01.	BODY	:	M.S. SHEET OF IS:2062

STANDARD	IS 16018:2012
FIRE RATING	20A:233B
TEMP. RANGE	-30° TO +55° C

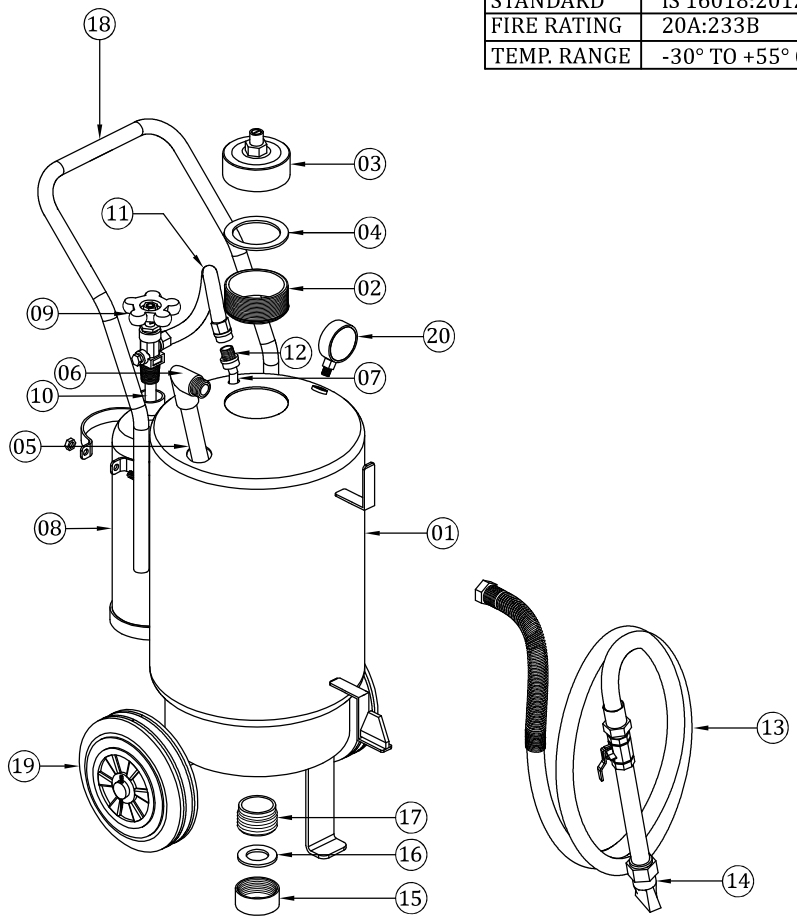

00.00.00	00.00.00		APP'D	A.Shah		01.05.18
00.00.00	00.00.00		CHK'D	Naresh		01.05.18
00.00.00	00.00.00		DR'N	RNG		01.05.18
Date	Rev.Dt	Description	XXX	Name	Sign.	Date

KANEX
KANADIA FYR FYTER PVT.LTD
(AN ISO-9001-2008 CERTIFIED CO.)
PLOT NO - 7, PARAS IND. ESTATE. NEAR GARIBSHA PIR, SIHOR -364 240.(GUJ.) e-mail: tech2@kanexfire.com

OWNER/CLIENT
XXX XXX XXX XX XXX

CONTRACTOR
XXX XXX XXX XX XXX

PO.No. XXX XXX XXX XX XXX

TITLE
ABC DRY POWDER MAP 50%
TROLLY MOUNTED 25 KG FIRE EXTINGUISHER

PROJECT XXX XXX XXX XX XXX

DRG.No. KFPL/GAD/KFDRQ-25-50%

Scale	NTS
Project	
Sheet	REV.
1 of 1	00

SIZE - A4